Stainless Steel Technical Specification

Paper Holder P1780

Stock Numbers:

- **P1780 – Paper Holder**
  Stainless Steel Finish

Dimensions:

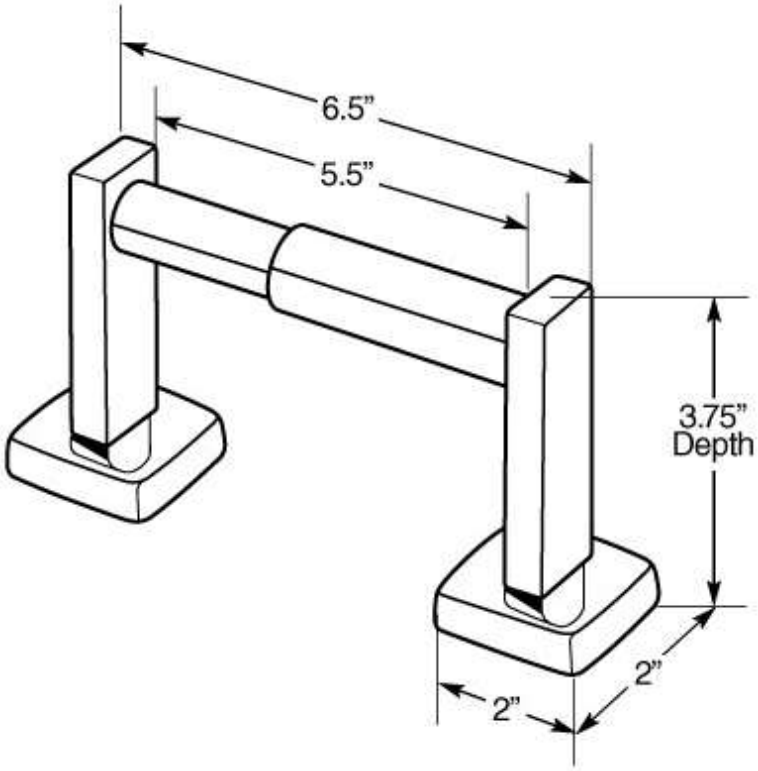

Materials:

Paper Holder posts are stamped from Type 304 stainless steel. Roller is triple chrome plated plastic and spring loaded.

Installation Instructions:

1. Remove mounting brackets from back of fixtures by loosening the set screws.
2. Position assembled unit on wall in desired location.
3. Lightly mark the outlines of the bases of the unit.
4. Center mounting brackets inside the outlines.
5. Mark hole locations. Attach brackets to wall using 1 3/8” screws (provided).
6. Mount bases on brackets. Tighten set screws on the bottom.

Note: Wood blocking is preferable behind all wall surfaces.
If wood blocking is not available, the following optional fasteners are suggested: Tile/Masonry – Plastic or Lead Anchors; Plaster/Drywall – Toggle Bolts.

Cleaning Instructions:

To preserve the fine finish of this product, clean only with a soft damp cloth. Dry well. Do not use commercial or abrasive cleaners.

Stock Number:_____Paper Holder
By Creative Specialties

Creative Specialties International
a Division of MOEN
Buy it for looks. Buy it for life.®

25300 AL MOEN DRIVE • NORTH OLMSTED, OH 44070
CORPORATE HEADQUARTERS: (800) 321-8809 • FAX: (800) 848-6636
INTERNATIONAL: (440) 962-2000 • FAX: (440) 962-2726
CUSTOMER SERVICE (USA): 800-882-0116 • FAX: (888) 379-2720
WWW.MOEN.COM

©Copyright Creative Specialties International Literature #BA1656

06/05/2012 SPC1320 500001250022 Released 01