Extension (1")

MODEL # 47172000

Pure Freude an Wasser

GROHE

Product Description:

Extension (1")

Standard Specification:
for Automatic 2000
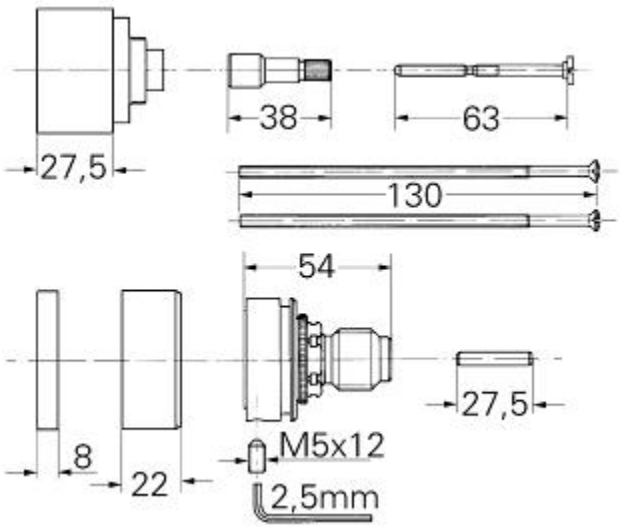
Color:
❑ 47172000 StarLight Chrome