Trade Mark:
CRYSTAL WORLD INC

Product Name: Pendant lamp
Model :9851W24-3-601
120Vac, 60Hz,AC ONLY
Lamp Size:W24"*H10"*E6"

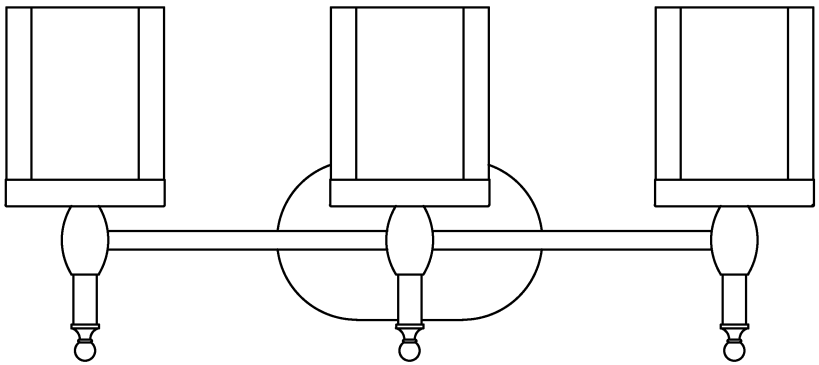

C US
Intertek
4006677

PENDANT LAMP ASSEMBLY INSTRUCTIONS
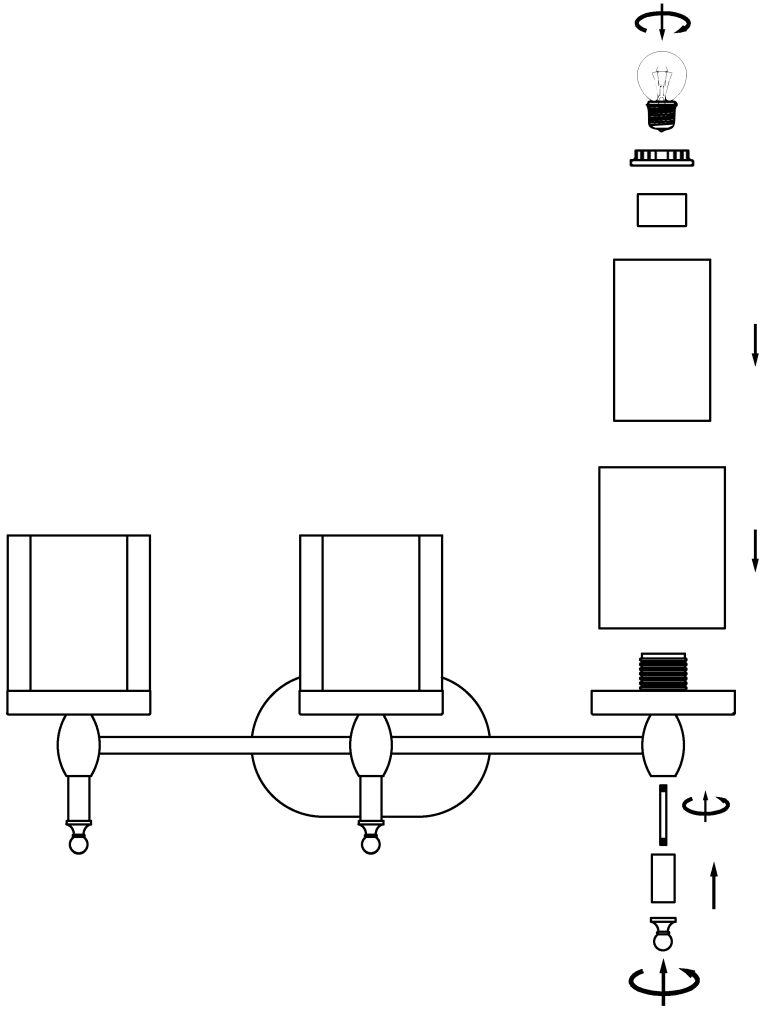
1.Install bulbs(NOT INCLUDED).USE **120V E26** **3*60W Max**.